CLASS A FILTER FABRIC SILT FENCE INSTALLATION

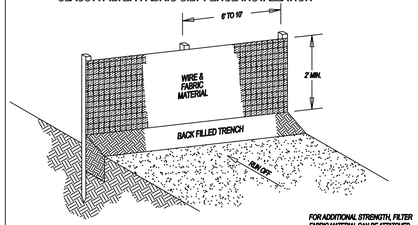

FOR ADDITIONAL STREMGTH, FILTER FABRIC MATERIAL CAN BE ATTACHED TO A 6" (MAX) MESH WIRE WHICH HAS BEEN FASTENED TO THE POSTS.

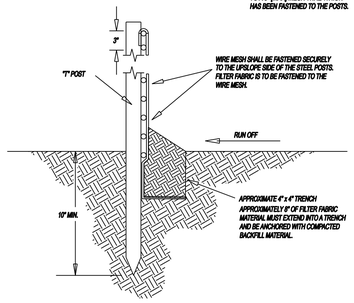

GRAVEL FILTER FOR AREA INLET

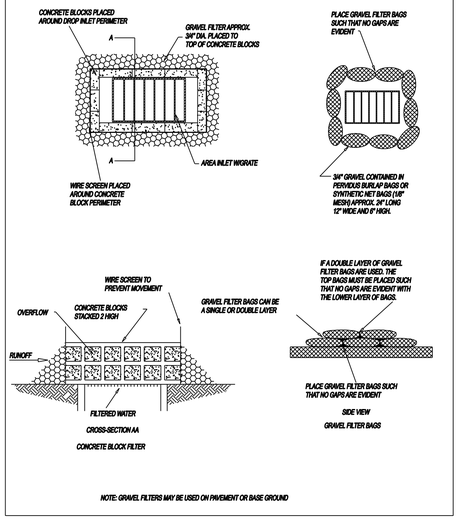

NOTE: GRAVEL FILTERS MAY BE USED ON PAVEMENT OR BASE GROUND

CURB INLET GRAVEL FILTER

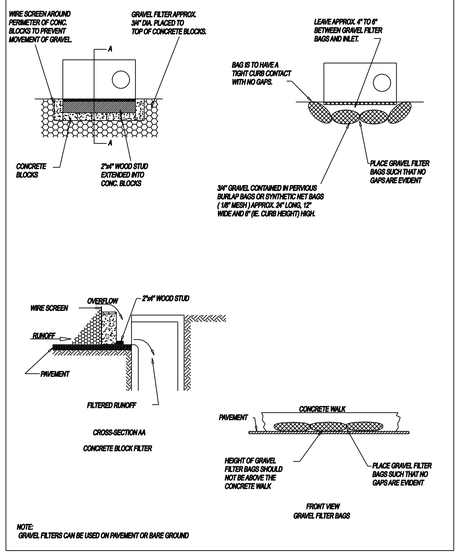

NOTE:
GRAVEL FILTERS CAN BE USED ON PAVEMENT OR BARE GROUND

D-50 OF ROCK (INCHES)	DOWNSTREAM FLOWLINE SLOPE OF STRUCTURE (FT/FT)							
	0.35	0.30	0.25	0.20	0.15	0.10		
	MAXIMUM WATER DEPTH OVER ROCK (INCHES)							
3	0.6	0.7	0.8	1.0	1.3	1.9		
6	1.2	1.4	1.6	2.0	2.6	3.9		

RECOMMENDED ROCK SIZE and FLOW DEPTHS

SMALL ROCK CHECK STRUCTURE FOR WIDE OF NARROW DRAINAGE CHANNELS

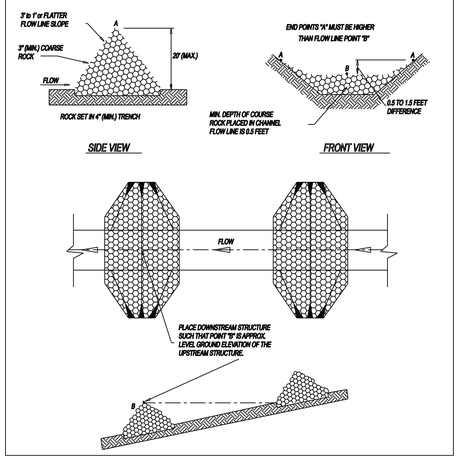

CLASS B FILTER FABRIC SILT FENCE INSTALLATION

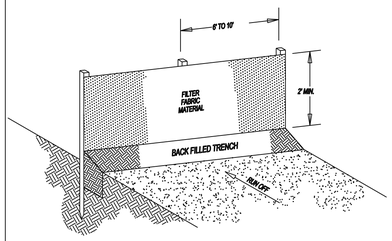

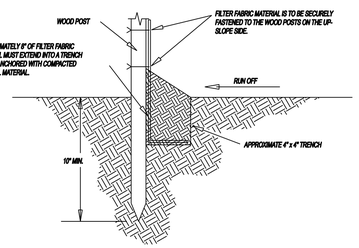

STRAW BALE DROP STRUCTURES FOR DRAINAGE CHANNELS

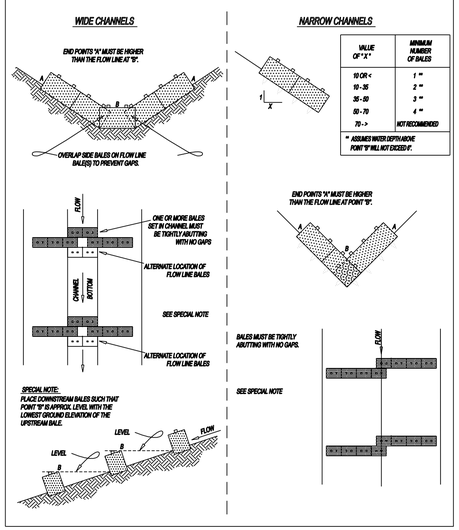

VALUE OF " X "	MINIMUM NUMBER OF BALES
10 OR <	1 **
10 - 35	2 **
35 - 50	3 **
50 - 70	4 **
70 - >	NOT RECOMMENDED

** ASSUMES WATER DEPTH ABOVE POINT "B" WILL NOT EXCEED 8".

INSTALLATION OF STRAW BALES

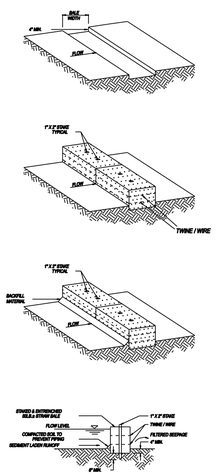

1. EXCAVATE THE TRENCH
2. PLACE & STAKE STRAW BALES

NOTES:

BALES MUST BE TIGHTLY ABUTTING WITH NO GAPS.

WEDGE LOOSE STRAW BETWEEN BALES.

3. BACKFILL & COMPACT EXCAVATED SOIL
4. X-SEC OF PROPERLY INSTALLED STRAW BALE

STRAW BALE FILTER FOR AREA INLET

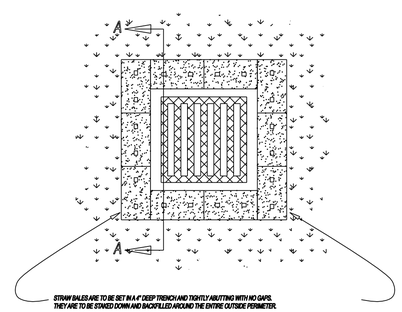

STRAW BALES ARE TO BE SET IN A 4" DEEP TRENCH AND TIGHTLY ABUTTING WITH NO GAPS. THEY ARE TO BE STAKED DOWN AND BACKFILLED AROUND THE ENTIRE OUTSIDE PERIMETER.

NOTE: STRAW BALE FILTERS ARE NOT TO BE USED IF ADJACENT AREA IS PAVED.

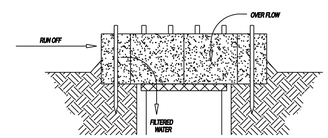

SECTION AA

Erosion control notes:

1. A construction exit must be installed at all points of ingress/egress to the site.
2. Erosion control blankets and netting should be used on steep slopes and in channels in conjunction with permanent vegetation.
3. Mulch all bare areas immediately following initial grading procedures.
4. BMP's will be inspected at least monthly and within 24 hours of rain events of 0.75 inches or greater. Maintenance and repair must be made within 3 days of inspections, unless otherwise directed.
5. Temporary seeding of disturbed areas should be implemented whenever disturbed soil areas will not be brought to finish grade for a period of 15 calender days or longer.
6. These standard details shall be applicable to all land disturbing activities and attached to the relevant site plan and/or subdivision drawings.
7. All erosion control measures are to be in accordance with the Alabama Handbook for Erosion Control and Storm Water Management on Construction Sites and Urban Areas (Latest Edition), and shall be maintained at all times during construction activities.
8. Silt Fence: remove accumulated sediment when depth reaches 1/4 the height of the barrier.

STANDARD DETAILS: EROSION CONTROL SHEET 1 of 2

PROJECT TITLE:

CITY OF ATHENS, ALABAMA INCORPORATED 1843

DEPARTMENT:	ENGINEERING	REVISIONS:
SCALE:	NTS.	
IMPLEMENTED:	JANUARY 1, 2006	

C:\PROJECTS\details\EROSIN.dgn 2/8/2007 4:33:48 PM